45 Series

Direct control valves

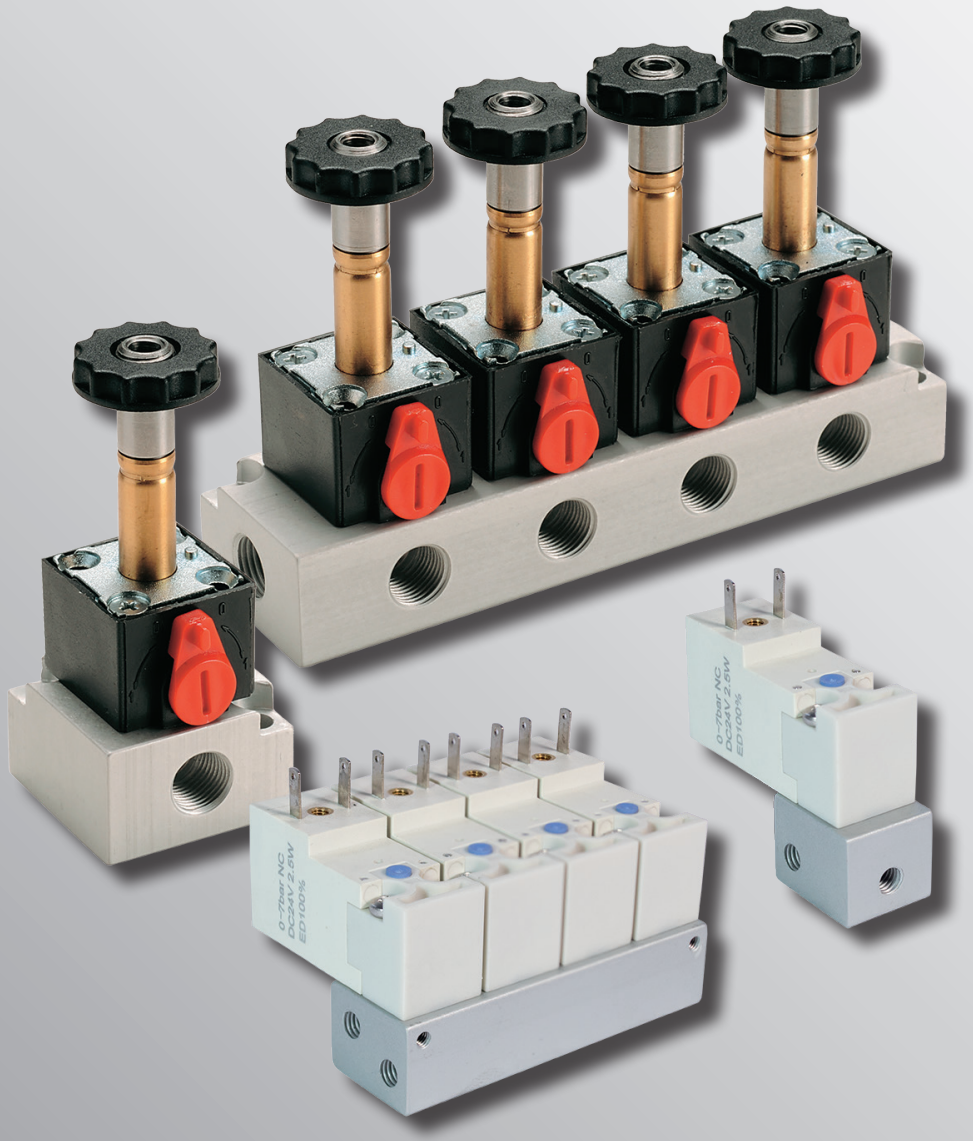

CERTIFIED
ISO 9001

Bonesi Pneumatik

Direct control valves - 45 series

Connections: M5 - 1/8"

45 SERIES



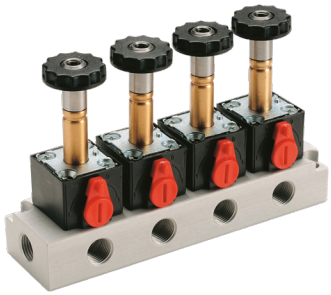

- Poppet valves
- Compact dimensions
- Anodized aluminium base
  Other components in thermoplastic polymers and metal
- 3/2 electro-pneumatically actuated

TECHNICAL CHARACTERISTICS			
Function	3/2 Normally closed		
Operation	Electro-pneumaticaly: Internal servo-pilot - Monostable mechanical spring return		
Materials	Base in anodized aluminium alloy - Sub-base and manual override in glass-filled nylon Plate in zinc-aluminium alloy - Other components in steel - Seals in NBR		
Note on materials	Compliant with REACH (1907/2006/EC and subsequent amendments)		
Connections	Size 15: M5 Size 22 : 1/8" Gas		
Threads	Metric - Cylindrical gases (BSPP)		
Operating temperature	0°C ÷ +80°C (-20°C with dry air, to avoid ice formation)		
Operating pressure	1 ÷ 10 bar		
Pilot operation pressure	1 bar		
Air flow rate	Size 15 - M5		Size 22 - 1/8"
Rated diameter	1,5 mm		1,5 mm
Supply pressure 6 bar (with ΔP 1 bar)	29 Nl/min		50 Nl/min
Fluido	Filtered air, lubrication-free, compliant with ISO 8573-1:2010 [7:4:4]		
Lubrificazione	Not required		

COILS ELECTRICAL CHARACTERISTICS				
Size	15 - M5		22 - 1/8"	
Coil type	Type "F"		Type "C"	
Operating voltage	24 Vdc	24, 110, 220 Vac	24 Vdc	24, 110, 220 Vac
Power (max.)	2,5 W	3,0 VA	4,8 W	5,5 VA
Tolerance	± 10%		± 10%	
Protection class	IP54 / IP65		IP54 / IP65	
Other characteristics	See from page 3.2.05.5		See from page 3.2.05.6	

Standard sales terms and conditions available on www.bonesipneumatik.it

MATERIALS - DIRECT CONTROL VALVES

POS	DESCRIPTION	MATERIAL
①	Base	Anodised drawn aluminium
②	Sub-base	Glass-filled nylon
③	Plate	Zinc-aluminium alloy
④	Manual override	Glass-filled nylon
⑤	Screw	Galvanised steel
⑥	Electropilot	Brass - Magnetic stainless steel
⑦	Ring nut	Acrilonitrile butadiene stirene ABS
⑧	Coil	NYLON + Fibreglass coating

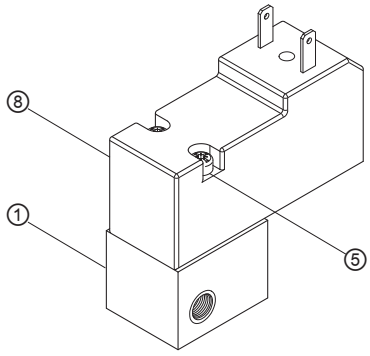

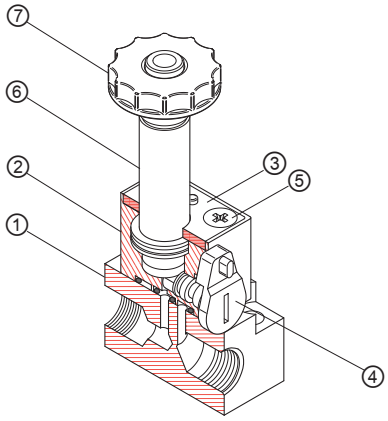

CODING KEY - DIRECT CONTROL VALVES

Series

45

45 = Direct control valves 3/2 Normally closed monostable

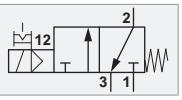

Version

6

6 = Version 15 M5 connections (for coils type F)

5 = Version 22 1/8" Gas connections (for coils type C)

N° positions

01

01 = 1 position
02 = 2 positions
03 = 3 positions
04 = 4 positions
05 = 5 positions
06 = 6 positions
07 = 7 positions
08 = 8 positions
09 = 9 positions
10 = 10 positions

POSSIBLE CONFIGURATIONS

Series

45
Direct control valves
3/2 NC - Monostable

Version

5
Version 15
Connections M5

6
Version 22
Connections 1/8" Gas

N° positions

01 1 position
02 2 positions
03 3 positions
04 4 positions
05 5 positions
06 6 positions
07 7 positions
08 8 positions
09 9 positions
10 10 positions

Standard sales terms and conditions available on www.bonesipneumatik.it

DIRECT CONTROL VALVES

VERSION 15 CONNECTIONS M5 - SINGLE BASE

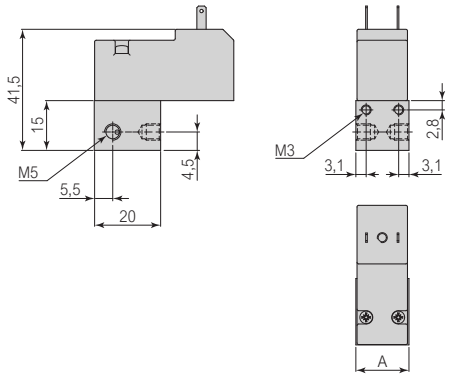

Symbol	N° positions	A	Connections	Code
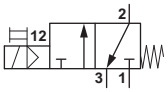	1	16	M5	45601

Coil type F available separately - See page 3.2.05.5

VERSION 15 CONNECTIONS M5 - ON MANIFOLDS

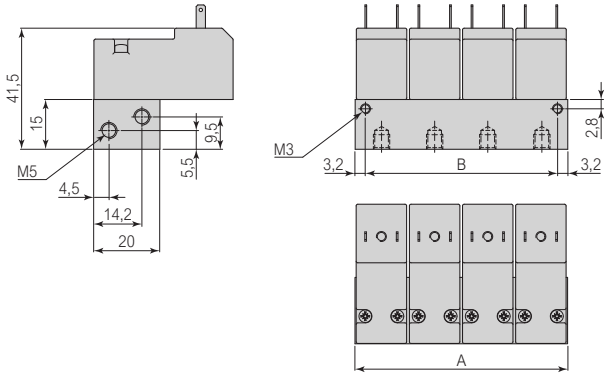

Symbol	N° positions	A	B	Connections	Code
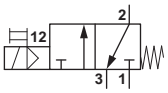	2	32	26,6	M5	45602
	3	48	41,6	M5	45603
	4	64	57,6	M5	45604
	5	80	73,6	M5	45605
	6	96	89,6	M5	45606
	7	112	105,6	M5	45607
	8	128	121,6	M5	45608
	9	144	137,6	M5	45609
	10	160	153,6	M5	45610

Coil type F available separately - See page 3.2.05.5

VERSION 22 CONNECTIONS 1/8" GAS - SINGLE BASE

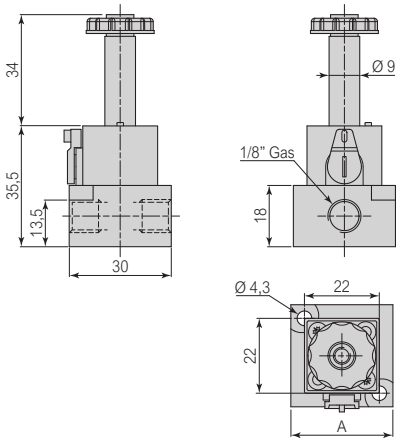

Symbol	N° positions	A	Connections	Code
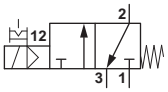	1	30	Gas 1/8"	45501

Coil type C available separately - See page 3.2.05.6

VERSION 22 CONNECTIONS 1/8"GAS - ON MANIFOLDS

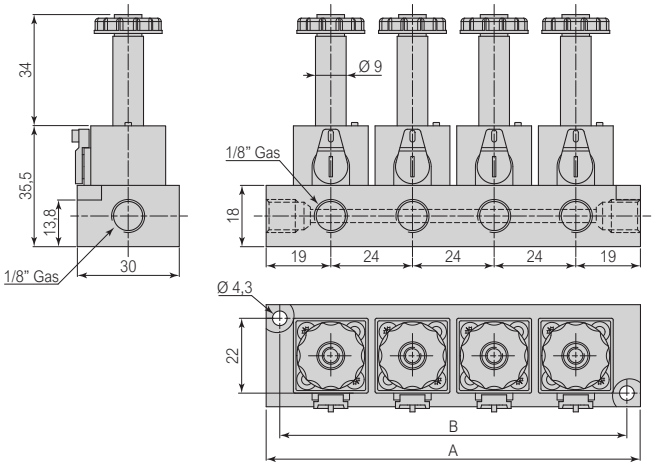

Symbol	N° positions	A	B	Connections	Code
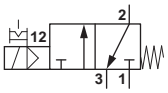	2	62	54	Gas 1/8"	45502
	3	86	78	Gas 1/8"	45503
	4	110	102	Gas 1/8"	45504
	5	134	126	Gas 1/8"	45505
	6	158	150	Gas 1/8"	45506
	7	182	174	Gas 1/8"	45507
	8	206	198	Gas 1/8"	45508
	9	230	222	Gas 1/8"	45509
	10	254	246	Gas 1/8"	45510

Coil type C available separately - See page 3.2.05.6

Standard sales terms and conditions available on www.bonesipneumatik.it

DIRECT CONTROL VALVES ACCESSORIES

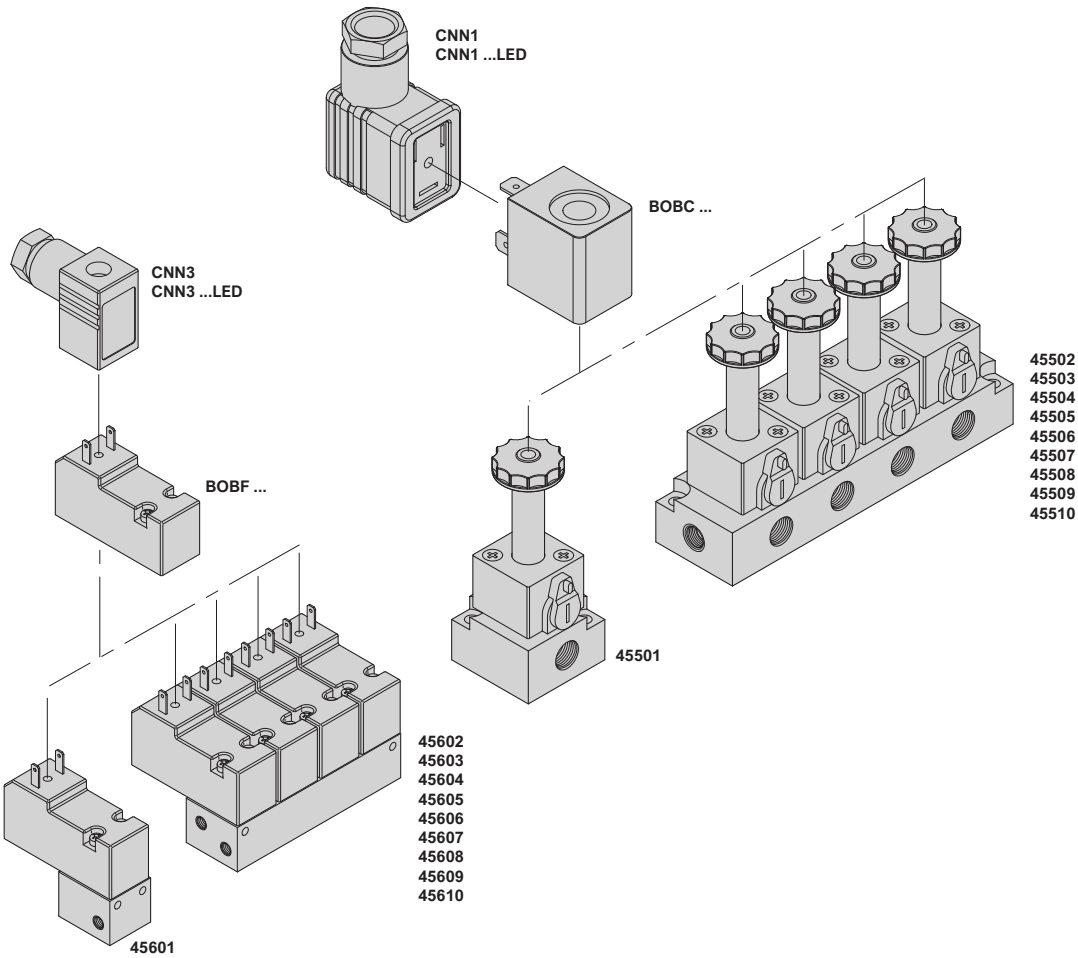

BOBF ... "F" type coils AC / DC		CNN3 Connectors for "F" type coils		CNN3 ... LED LED connectors for "F" type coils	
					
Page 3.1.05.10		Page 3.1.05.11		Page 3.1.05.11	
24 Vdc	BOBF024DC	0÷250 V ac/dc	CNN3	12 V ac/dc	CNN3 2 LED
24 Vac	BOBF024AC			24 V ac/dc	CNN3 2 LED
110 Vac	BOBF110AC			115 V ac/dc	CNN3 4 LED
220 Vac	BOBF220AC			230 V ac/dc	CNN3 5 LED
RESIN body NBR gasket		PA6 GF		PA6 GF - PA12	

BOBC ... "C" type coils AC / DC		CNN1 Connectors for "C" type coils		CNN1 ... LED LED connectors for "C" type coils	
					
Page 3.1.05.10		Page 3.1.05.11		Page 3.1.05.11	
24 Vdc	BOBC024DC	0÷250 V ac/dc	CNN1	12 / 24 V ac/dc	CNN1 2 LED
24 Vac	BOBC024AC			115 V ac/dc	CNN1 4 LED
110 Vac	BOBC110AC			230 V ac/dc	CNN1 5 LED
220 Vac	BOBC220AC				
Coating in NYLON + FIBREGLASS		PA6 GF		PA6 GF - PA12	

Standard sales terms and conditions available on www.bonesipneumatik.it

"F" type COILS (15 mm)

BOBF ...
Direct current coils

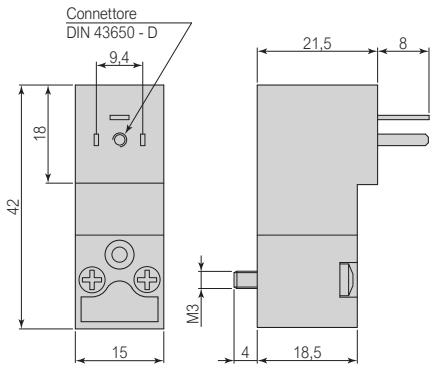

Technical features		
Code	BOBF024DC	
Operating voltage	24 VDC	
Power (max.)	2.5 W	
Voltage tolerance	±10% (of nominal voltage)	
Insulation class	200°C (H)	
Insertion duration	100% (at 20°C)	
Electrical connection	DIN 43650 form D	
Version	3/2 N.C.	
Work pressure	0 ÷ 7 bar	
Protection class	IP65 (with connector and suitable gaskets)	
Material	RESIN body, NBR gasket, steel screws	

BOBF... / 1 piece per pack

BOBF ...
AC coils

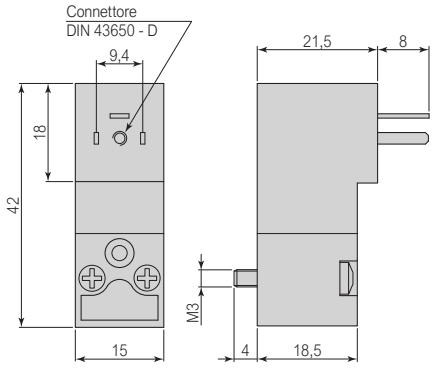

Technical features			
Code	BOBF024AC	BOBF110AC	BOBF220AC
Operating voltage	24 VAC	110 VAC	220 VAC
Power (max.)	3.0 VA		
Voltage tolerance	±10% (of nominal voltage)		
Insulation class	200°C (H)		
Insertion duration	100% (at 20°C)		
Electrical connection	DIN 43650 form D		
Version	3/2 N.C.		
Work pressure	0 ÷ 7 bar		
Protection class	IP65 (with connector and suitable gaskets)		
Material	RESIN body, NBR gasket, steel screws		

BOBF... / 1 piece per pack

CONNECTORS for "F" type coils (15mm)

CNN3...
Connector for "F" type coils

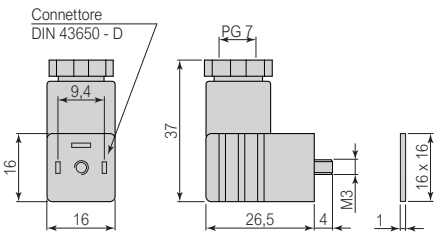

CNN3

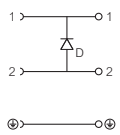

CNN3...LED

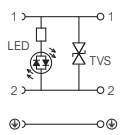

Technical features				
Code	CNN3	CNN3 2 LED	CNN3 4 LED	CNN3 5 LED
Voltage	0÷250 V AC/DC	24 V AC/DC	115 V AC/DC	230 V AC/DC
Current (max.)	4 A	4 A	5 A	5 A
Contact resistance (max.)	15 mΩ			
Overvoltage category	III			
Conductor cross-section (max.)	1.5 mm² (without terminals)			
Cable clamp thread	PG7			
Operating temperature	-40°C ÷ +100°C	-20°C ÷ +80°C	-20°C ÷ +80°C	-20°C ÷ +80°C
Electrical connection	DIN 43650 form D			
Protection class	IP65 (properly assembled)			
Insert and case materials	PA6 GF - PA6 GF	PA6 GF - PA12	PA6 GF - PA12	PA6 GF - PA12
Visual indicator	None	Yellow LED diode	Yellow LED diode	Yellow LED diode
Colour	Black	Clear	Clear	Clear
Electrical circuit protection	Diode	TVS Circuit	TVS Circuit	TVS Circuit
Fixing type	Central screw M3x27,5			

CNN3... / Insert, case, gasket and fixing screw - 1 piece per pack

Standard sales terms and conditions available on www.bonesipneumatik.it

"C" type COILS (22 mm)

BOBC ...
Direct current coils

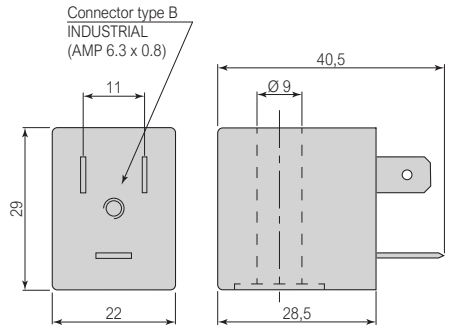

Technical features	
Code	BOBC024DC
Operating voltage	24 VDC
Power (max.)	4.8 W
Voltage tolerance	±10% (of nominal voltage)
Insulation class	155°C (F)
Wire insulation class	200°C (H)
Insertion duration	100% (at 20°C)
Electrical connection	INDUSTRIAL (AMP 6.3 x 0.8) form B
Protection class	IP54 (with connector) IP65 (with connector and suitable gaskets)
Material	NYLON + Fibreglass coating

BOBC... / 1 piece per pack

BOBC ...
AC coils

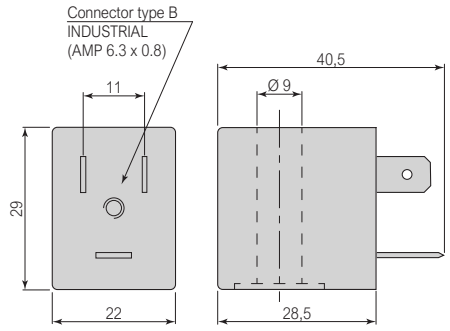

Technical features				
Code	BOBC024AC	BOBC110AC	BOBC220AC	
Operating voltage	24 VAC	110 VAC	220 VAC	
Power (max.)	5.5 VA			
Voltage tolerance	±10% (of nominal voltage)			
Insulation class	155°C (F)			
Wire insulation class	200°C (H)			
Insertion duration	100% (at 20°C)			
Electrical connection	INDUSTRIAL (AMP 6.3 x 0.8) form B			
Protection class	IP54 (with connector) IP65 (with connector and suitable gaskets)			
Material	NYLON + Fibreglass coating			

BOBC... / 1 piece per pack

CONNECTORS for "C" type coils (22 mm)

CNN1...
Connector for "C" type coils

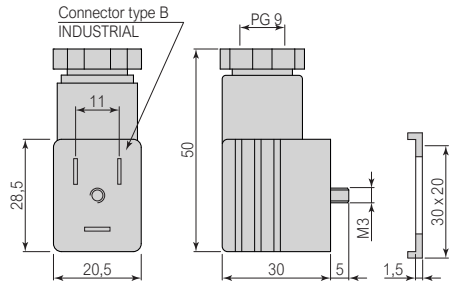

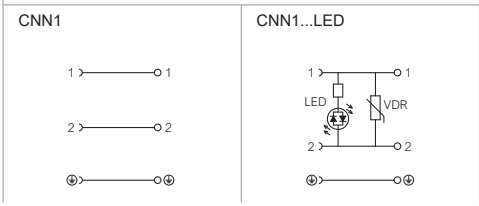

Technical features				
Code	CNN1	CNN1 2 LED	CNN1 4 LED	CNN1 5 LED
Voltage	0÷250 V AC/DC	12/24 V AC/DC	115 V AC/DC	230 V AC/DC
Current (max.)	10 A	5 A	5 A	5 A
Contact resistance (max.)	15 mΩ			
Overvoltage category	III			
Conductor cross-section (max.)	1.5 mm² (without terminals)			
Cable clamp thread	PG9			
Operating temperature	-40°C ÷ +100°C	-20°C ÷ +80°C	-20°C ÷ +80°C	-20°C ÷ +80°C
Electrical connection	INDUSTRIAL (AMP 6.3 x 0.8) form B			
Protection class	IP65 (properly assembled)			
Insert and case materials	PA6 GF - PA6 GF	PA6 GF - PA12	PA6 GF - PA12	PA6 GF - PA12
Visual indicator	None	Yellow LED diode	Yellow LED diode	Yellow LED diode
Colour	Black	Clear	Clear	Clear
Electrical circuit protection	None	VDR Circuit	VDR Circuit	VDR Circuit
Fixing type	Central screw M3x32,5			

CNN1... / Insert, case, gasket and fixing screw - 1 piece per pack

Standard sales terms and conditions available on www.bonesipneumatik.it

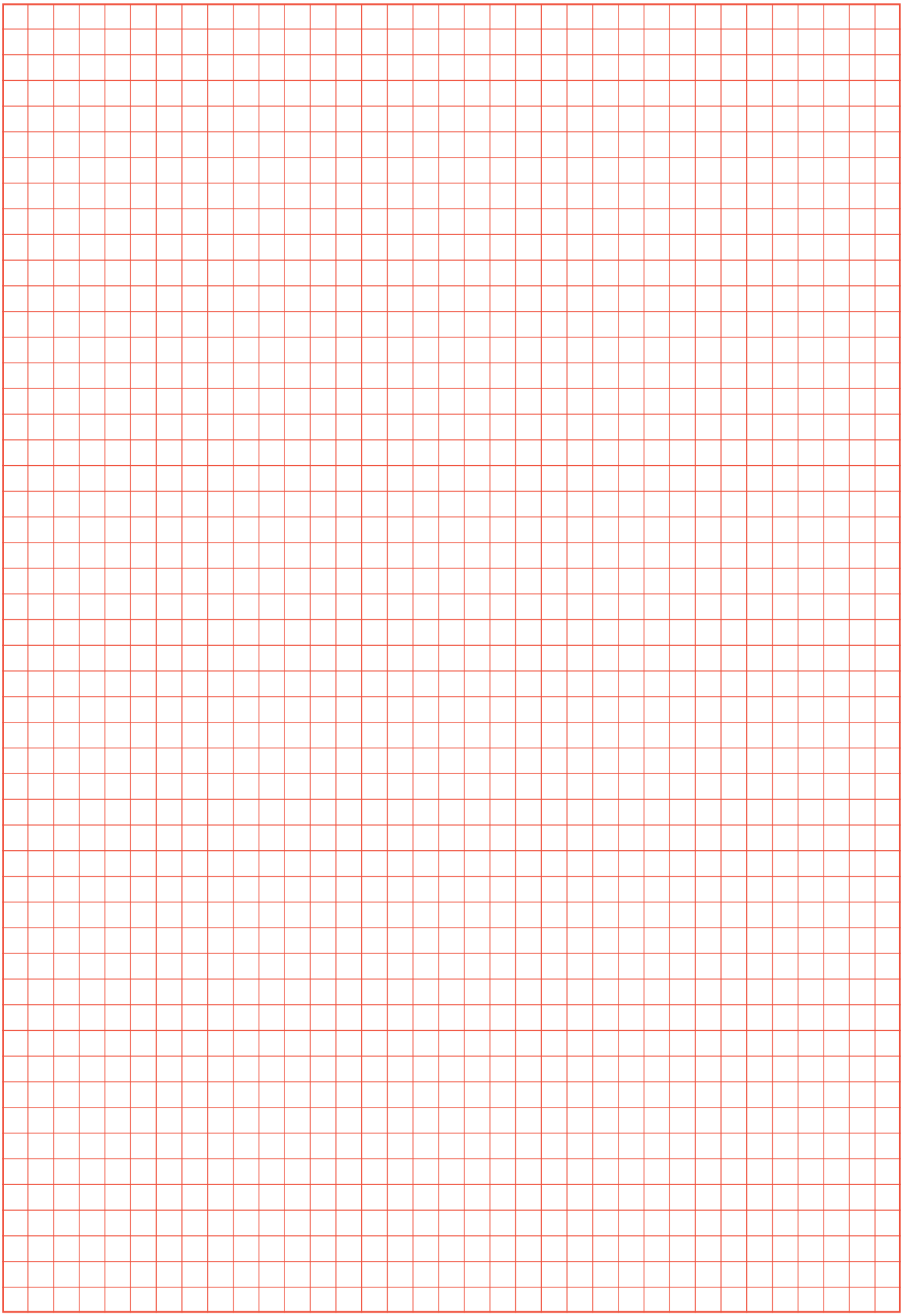

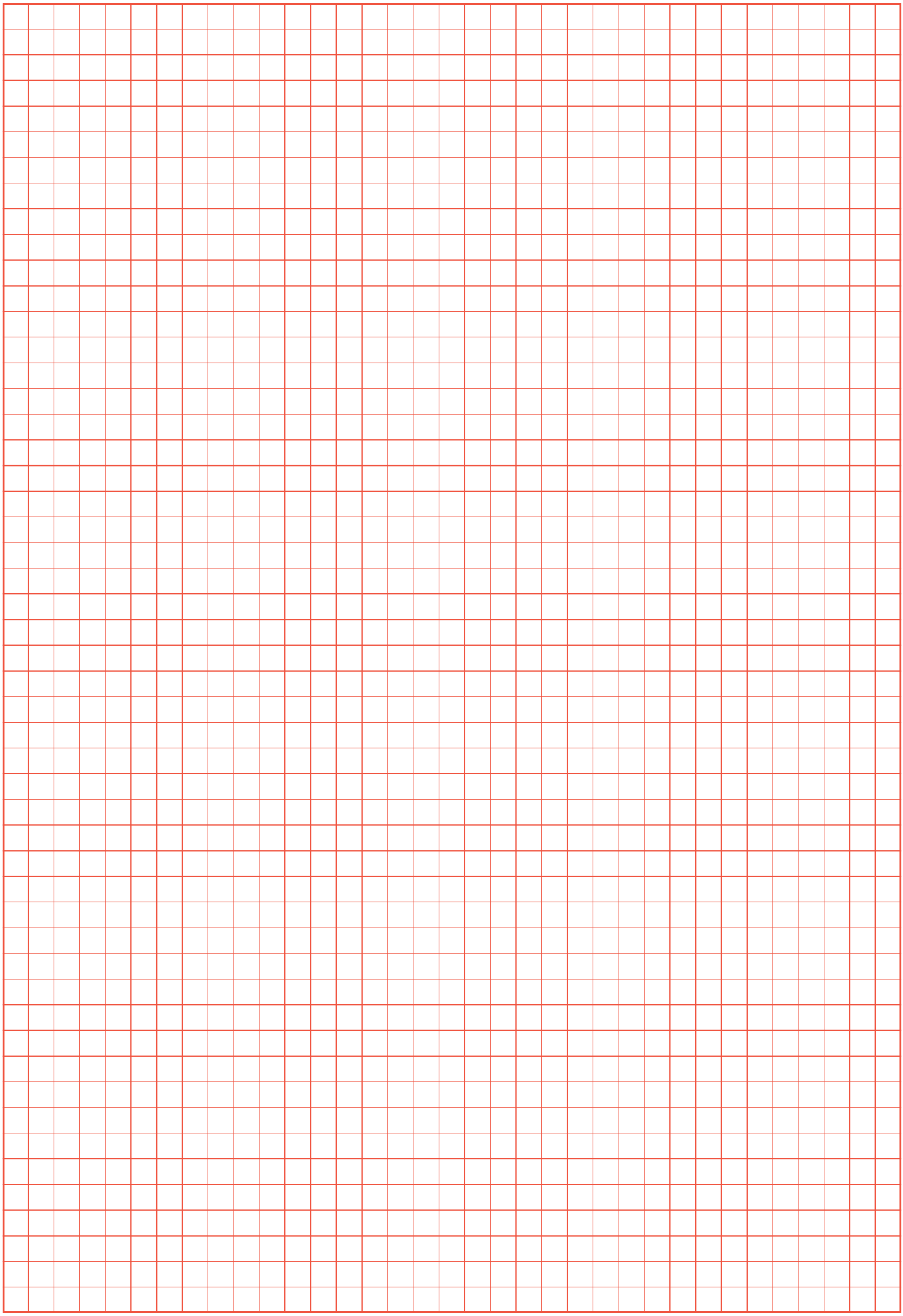

BONESI PNEUMATIK makes all its products in Italy



Cat. 45/EN (11 / 2026) - Bonesi Pneumatik s.r.l. reserves the right to modify the declared data without notice

BONESI PNEUMATIK s.r.l.
Via A. Robino n. 117
20025 Legnano (MI) Italy
P.I. / C.F. 10396340159
R.E.A. 1373315

www.bonesipneumatik.it
info@bonesipneumatik.it
Phone +39 0331 448000
Telefax +39 0331 448070